used for: D-SUB

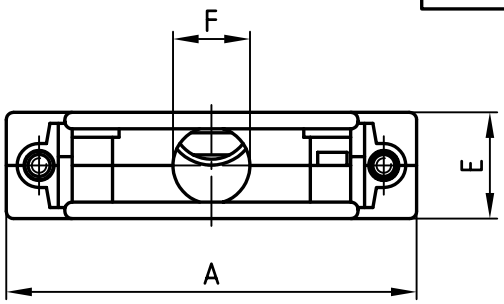

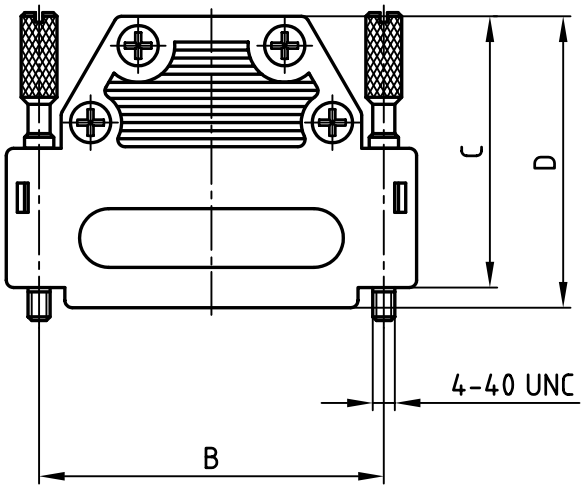

No. of pos.	A	B	C	D	E	F	Part No.
9	34.0	25.0	25.0	27.75	14.5	8.5	**165X10139XE**
15	42.3	33.3	37.0	39.75	14.5	10.0	**165X10149XE**
25	56.0	47.0	37.0	39.75	14.5	10.5	**165X10159XE**
37	72.5	63.5	37.0	39.75	14.5	10.5	**165X10169XE**
50	70.0	61.1	50.0	50.00	21.0	10.5	**165X10179XE**

Directive 2002/95/EC
„RoHS"
Compliant

APPROVAL # FREIGABE # DEBLOCAGE # AUTORIZACION # APPROVAL

CUSTOMER APPROVAL DATE:

NAME: TITLE:

COMPANY NAME:

NOTES:

1. HOOD: POLYAMID + GF / BLACK
2. JACKSCREW: BRASS; NICKEL PLATED
3. NUT: BRASS; NICKEL PLATED
4. STRAIN RELIEF: STEEL
5. PAN-HEAD SCREW: BRASS; NICKEL PLATED
6. COUNTERSUNK-HEAD SCREW: BRASS; NICKEL PLATED

THIS DRAWING MAY NOT BE COPIED OR REPRODUCED IN ANY WAY, AND MAY NOT BE PASSED ON TO A THIRD PARTY WITHOUT WRITTEN PERMISSION. OWNERSHIP AND COPYRIGHT OF CONEC GmbH

DO NOT ALTER CAD DRAWING BY HAND

rev.	description	date	name

tolerance — dim. in mm

2004	date	name
drawn	08.01.	Lehmenkühler
appd.	08.01.	Kühle
norm		
d-old		

CONEC®

scale: 1:1

material: SEE NOTES

title:

PLASTIC HOOD

9-50pos., straight cable exit, jack screws
single packed version

dwg no: 16K1A1078

AutoCAD 2000 | DIN-A 4 | sh: 1/1

part no: SEE TABLE